NOTES:

1. FOR GENERAL SPECIFICATIONS, REFER TO DOC 00003952
2. FLORIDA PRODUCT APPROVAL: FL13630, FL13631, AND FL13632
3. THE PRODUCT SHOWN HEREIN IS DESIGNED AND MANUFACTURED TO COMPLY WITH THE 9TH EDITION (2026) FLORIDA BUILDING CODE FOR USE OUTSIDE THE HIGH VELOCITY HURRICANE ZONE
4. THIS DOCUMENT ADDRESSES ONLY PRODUCT ANCHORAGE TO ACHIEVE THE INDICATATED DESIGN PRESSURES AT THE INDICATED SIZES, IN THE CONFIGURATIONS INDICATED. INSTALL PRODUCTS WITH MAXIMUM SHIM GAP, MINIMUM EDGE DISTANCE AND EMBEDMENT, AND WITH FASTENER TYPE AS SHOWN IN THE DETAILS AND AS INDICATED IN TABLE 1. FOR FULL PRODUCT CONSTRUCTION DETAILS, REFER TO TABLE 2
5. THIS PRODUCT AS SHOWN IN THIS DRAWING IS NON-IMPACT, AND REQUIRES THE USE OF IMPACT PROTECTIVE DEVICES (SHUTTERS) IN WINDBORNE DEBRIS REGIONS.
6. GLAZING SHALL BE COMPLIANT WITH ASTM E1300
7. THE OPENING SUBSTRATE MATERIALS (FRAMING, MASONRY, BUCKS) AND ATTACHMENT OF BUCKS TO THE SUBSTRATE ARE BY OTHERS AND SHALL BE VERIFIED BY THE ARCHITECT OR ENGINEER OF RECORD OR AS APPROVED BY THE AUTHORITY HAVING JURISDICTION. BUCKING, OPENINGS, AND BUCKING FASTENERS MUST BE PROPERLY DESIGNED AND INSTALLED BY OTHERS IN ACCORDANCE WITH THE FBC TO TRANSFER SUPERIMPOSED LOADS TO THE STRUCTURE. WITH MASONRY OPENINGS, WOOD BUCKS ARE OPTIONAL
8. DISSIMILAR METALS THAT COME INTO CONTACT SHOULD BE COATED OR PROTECTED TO PREVENT GALVANIC REACTIONS. WOOD BUCKS SHALL BE PRESSURE TREATED, WITH A TREATMENT OR COATING COMPATIBLE WITH THIS PRODUCT
9. WOOD BUCKS LESS THAN 1-1/2" THICK ARE OPTIONAL AND MAY BE USED WITH CONCRETE/CMU, WITH ANCHOR EMBEDMENT BEYOND THE WOOD BUCKS AND INTO THE MASONRY
10. ALL HARDWARE AND FASTENERS SHALL BE IN ACCORDANCE WITH THESE DRAWINGS OR AS APPROVED, SIGNED, AND SEALED BY A FLORIDA-REGISTERED PROFESSIONAL ENGINEER ON A SITE SPECIFIC BASIS
11. THIS PRINT IS FOR STRUCTURAL PERFORMANCE ONLY. FOR FLASHING AND SEALING INSTRUCTIONS, REFER TO MANUFACTURER'S INSTRUCTIONS
12. SHIMS:
    - PLACE SHIMS WITHIN 4"-6" OF EACH CORNER AND AT EACH THROUGH JAMB LOCATION.
13. ANCHORAGE NOTES: ALL ANCHORS USED SHALL BE OF A MATERIAL OR HAVE A COATING COMPATIBLE WITH THE PRESSURE TREATED WOOD BUCKS AND ALL OTHER WINDOW MATERIALS. INSTALL ONE ANCHOR AT EACH LOCATION SHOWN IN THE ELEVATION. INSTALL SHIMS AT EACH ANCHOR LOCATION WHERE A GAP OF 1/16" OR GREATER EXISTS BETWEEN PRODUCT FRAME AND SUBSTRATE. SHIMS SHALL BE LOAD-BEARING (PLASTIC OR METALLIC) AND CAPABLE OF TRANSFERRING LOADS TO SUBSTRATE. SPECIFIED ANCHOR EMBEDMENT TO SUBSTRATE SHALL BE BEYOND WALL FINISH OR STUCCO. ALL FASTENERS MUST BE SPACED A MIN. OF 4" ON CENTER
14. FOR METHODS AND ADDITIONAL REQUIREMENTS, REFER TO DOC 00115054

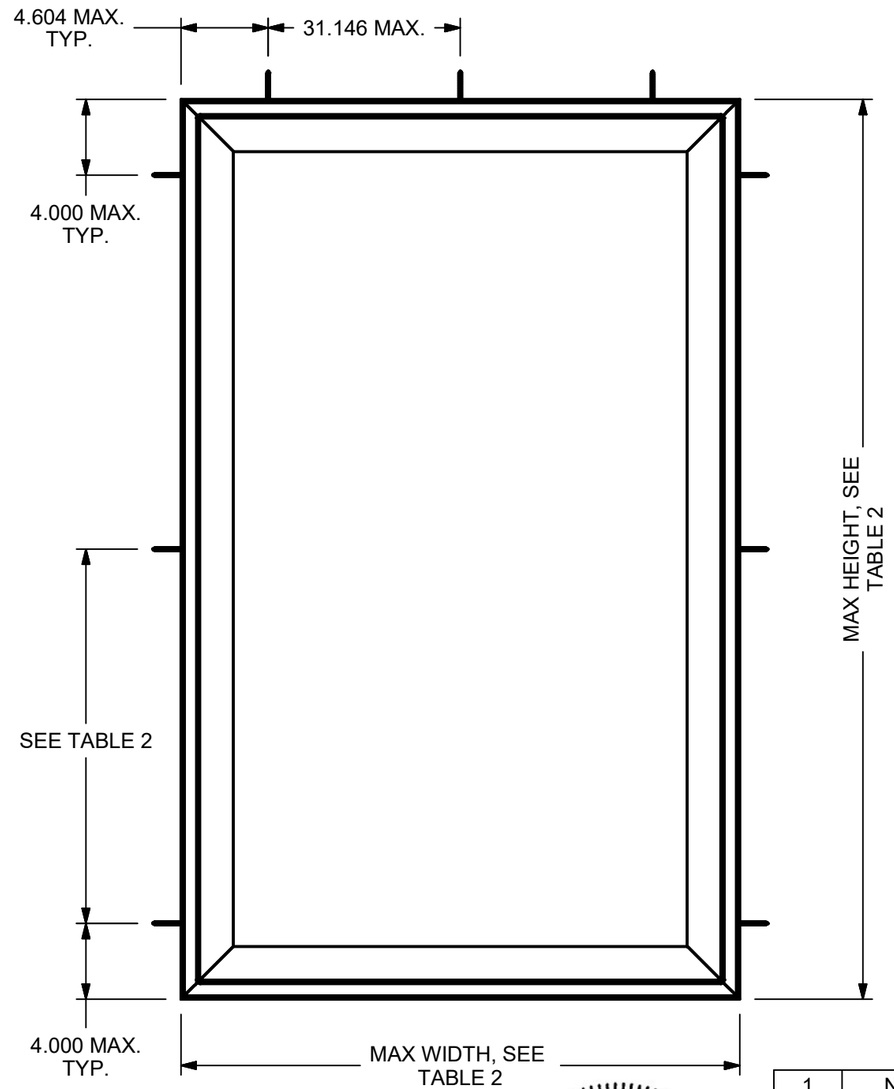

HEAD JAMB

- 2 FASTENERS/HEAD JAMB FOR FRAME WIDTHS 35.500" AND LESS
- 3 FASTENERS/HEAD JAMB FOR FRAME WIDTHS OVER 35.500"

TABLE 2: SIZES AND FASTENER SPACINGS. ALL CONFIGURATIONS ARE +/-40 PSF DESIGN PRESSURE RATING.

CONFIG.	MAX. SIZE (in.)	MAX. JAMB FASTENER SPACING
ESAWN	47-1/2 X 35-1/2	27-1/2"
ESAWN	59-1/2 X 47-1/2	16-1/4"
ESCA	35-1/2 X 83-1/2	27-1/4"
ESCA	30-5/16 X 83-1/2	31-3/4"
ESCA	35-1/2 X 71-1/2	27-1/4"
ESCA	35-1/2 X 54	27-1/4"
ESCA	35-1/2 X 34	27-1/4"
ESCA	27-7/16 X 83-1/2	31-3/4"
ESCA	27-7/16 X 71-1/2	31-3/4"
ESCAP	71-1/2 X 71-1/2	13-1/2"
ESCAP	47-1/2 X 83-1/2	27-1/2"
ESCATR	71-1/2 X 71-1/2	13-1/2"

ITEM	DWG NO	DESCRIPTION
1	NA	INSTALL FASTENER, SEE TABLE 1, DOC 00115054

PARTS LIST

Lucas Turner
2026.09.25
11:24:12
-05'00'

LUCAS A. TURNER
LICENSE
No. 58201
STATE OF FLORIDA
PROFESSIONAL ENGINEER

9/25/2026
LUCAS TURNER, FL PE 58201
TURNER ENGINEERING & CONSULTING, INC.
2428 OLD NATCHEZ TRACE TRL.
CAMDEN, TN, 38320
PH 941-380-1574

MARVIN Windows and Doors

RESEARCH & DEVELOPMENT
WARROAD, MN, USA, (218) 386-4021

PRODUCT CATEGORY:	ESSENTIAL
UNIT TYPE:	ESAWN, ESCA, ESCAP
DWG TYPE:	INSTALLATION
DESCRIPTION:	ELEVATION, THROUGH JAMB, NON-WOOD

CHK: SAL 02/14/19	SIZE: B	CLASS: MISC	DWG NO: 00115053	
APP: JMD 02/14/19	SCALE: 1:8	DATE: 09/18/18	DWG BY: SMITH, BRENDAN	SHEET: 1 OF 1

REV	DESCRIPTION / REQUESTOR	ECN NO	DATE	REV BY
0.1	ADDED MAX JAMB FASTENER SPACING TO TABLE 2. REPLACED JAMB AND HEAD JAMB RO DIMESIONS WITH FRAME DIMENSIONS.	22832	02/14/19	BGS

Template Version 10.5

NOTICE - CONFIDENTIAL INFORMATION
The information in this document is privileged and strictly confidential. The information contained herein shall be used only by Marvin Windows and Doors employees and by those agents or suppliers granted official written permission. If the reader of this document is not the intended recipient, or the employee or agent of the intended recipient, please delete this document from all data storage devices, and destroy all hard copies. Any unauthorized dissemination, distribution, copying or other use of the information contained in this document is strictly prohibited.